*Maximum Uniform Divided Load (UDL):*

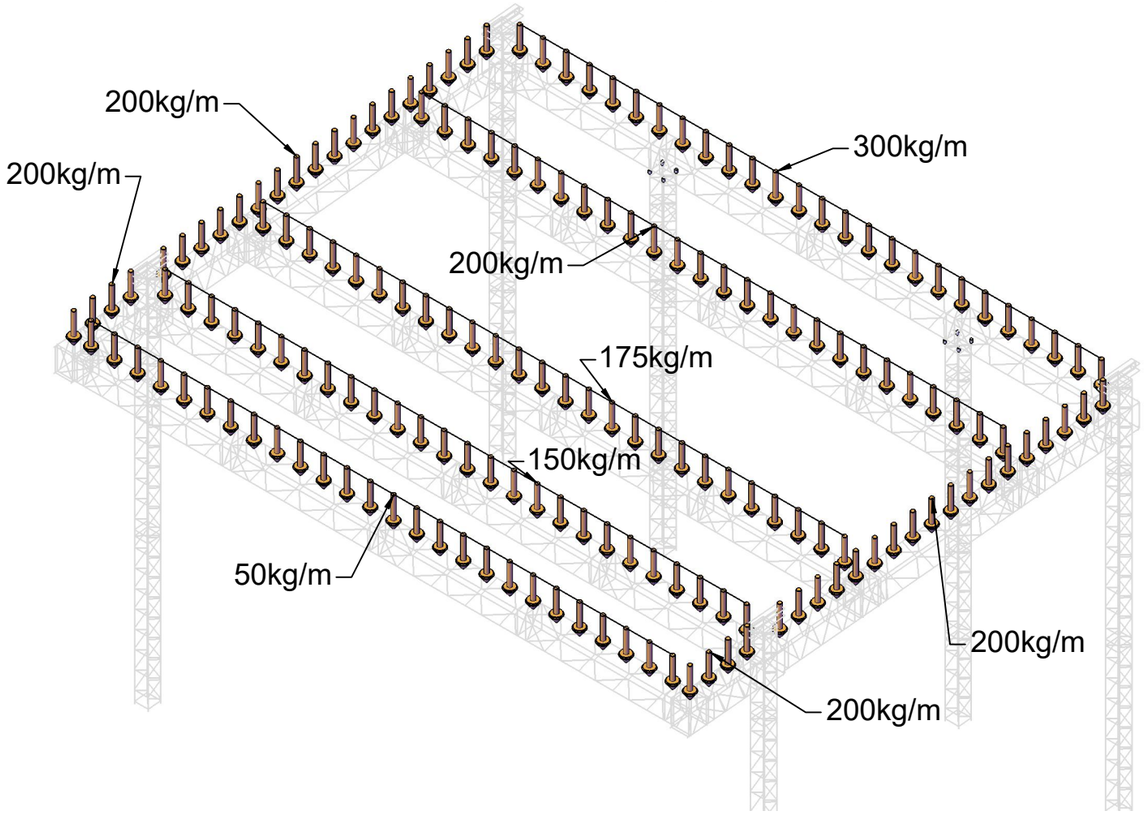


*Or Maximum Centre Point Load (CPL):*

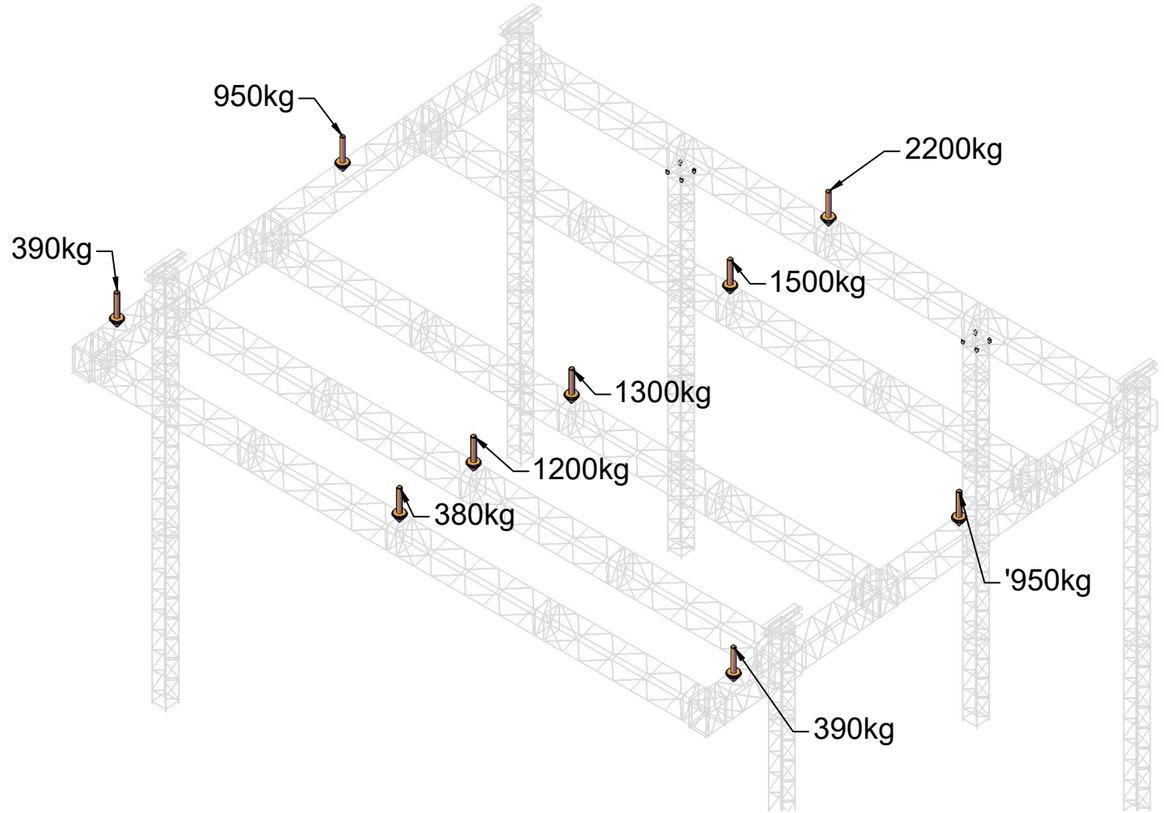


*Or maximum Third Points Load (TPL):*

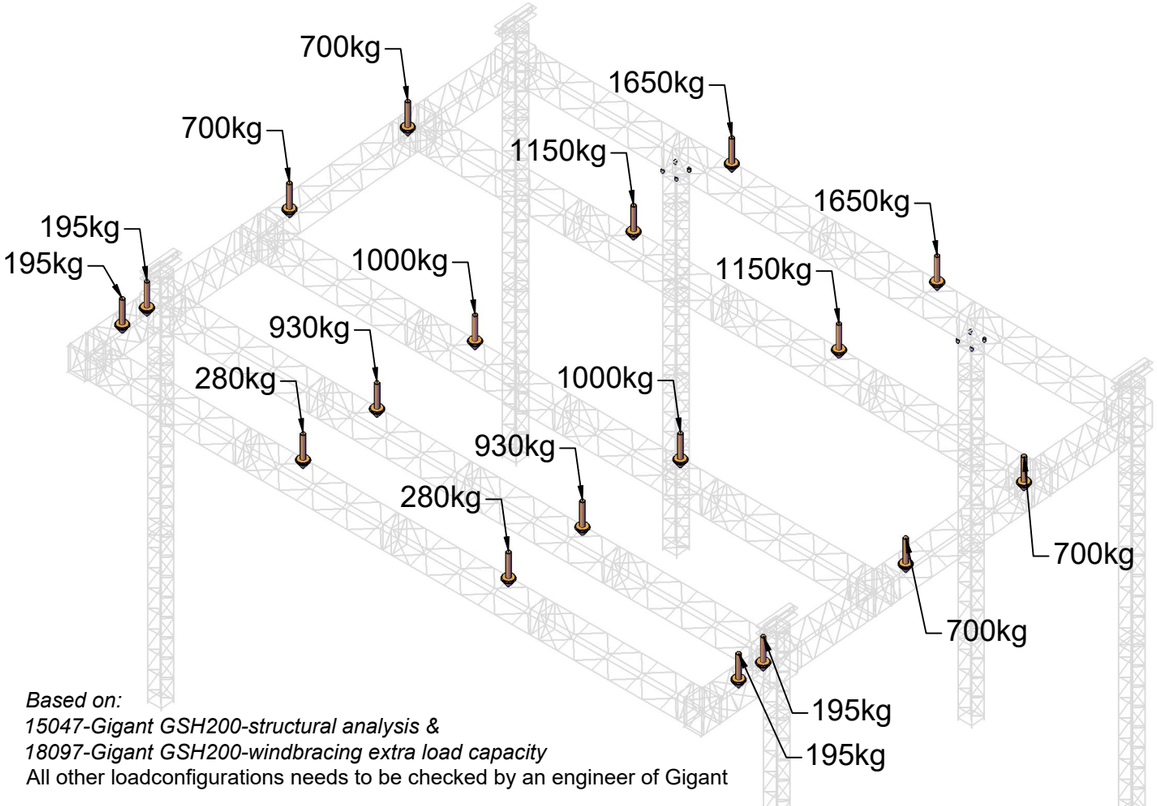


*Or maximum Fourth Points Load (QPL):*

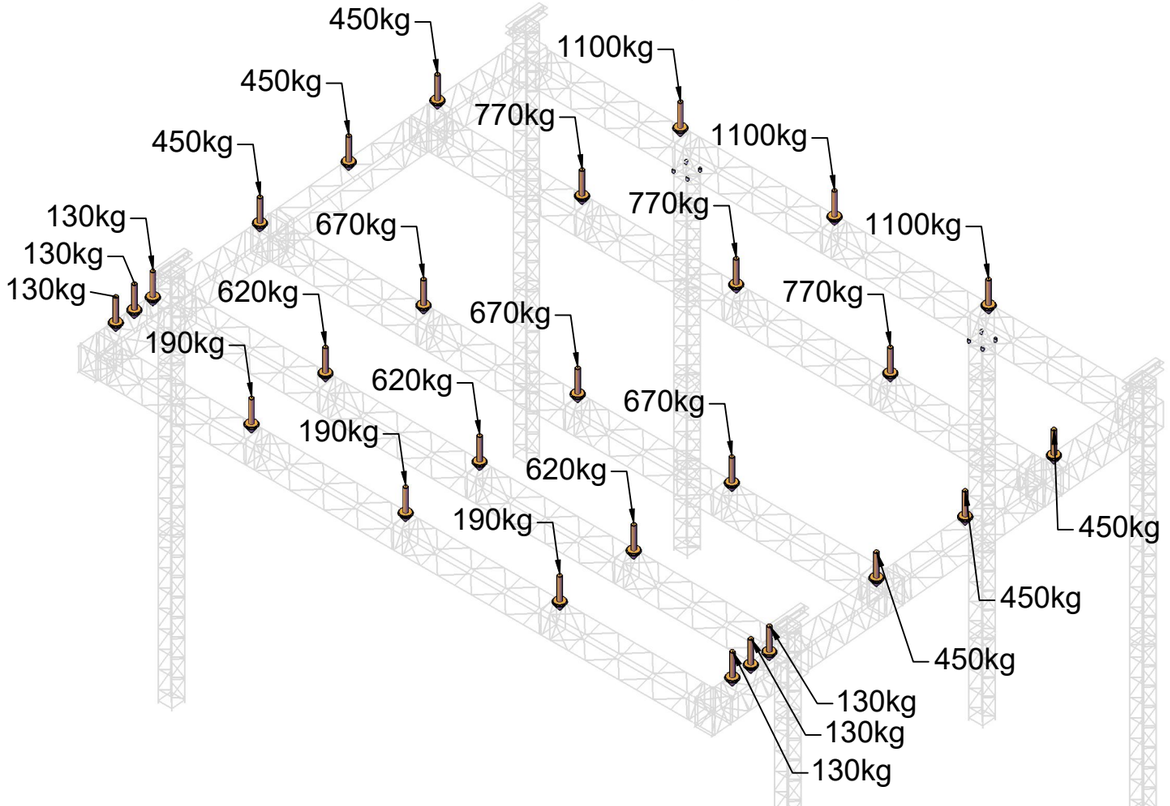


*Based on:*
*15047-Gigant GSH200-structural analysis &*
*18097-Gigant GSH200-windbracing extra load capacity*
All other loadconfigurations needs to be checked by an engineer of Gigant

Page name: *A3 - Production Loads*
Drawn by: *Gigant*
Number:
City / Venue: *---*
E-mail: *info@gigantinternational.com*
Date: *16-apr-20*
Scale: *----*
Units: *mm*
Phone: *+31 (0) 497 51 7771*

*GSH-200-additional towers*

GIGANT
WWW.GIGANTINTERNATIONAL.COM